CAPITAL
LIGHTING FIXTURE COMPANY

ASSEMBLY AND INSTALLATION INSTRUCTIONS for the ***947911*** Outdoor Fixture

Important Safety information (Please read before proceeding)

1. Remove the fixture, parts and all mounting hardware bags (orange) from the carton and verify that all parts are present according to the illustration sheet. All parts must be used as indicated. Do not replace any parts, leave any parts out, or use any parts which are worn out or broken. **Failure to follow the instructions could cause a hazardous situation, voids the warranty and violates the U.L. listing of the fixture.**
2. To prevent the electric shock, turn off the main power at the circuit breaker before installing the fixture. **NEVER attempt to install, clean or replace bulbs without shutting off the electricity to the fixture.**
3. **Never use light bulbs with wattage ratings that exceed the fixtures maximum rating.** Always make sure the electric current is turned off before changing the bulbs.
4. If you experience difficulties installing the lighting fixture or it fails to work as expected, please contact a local qualified licensed electrical contractor.
5. Please contact your local Capital Lighting Fixture reseller with any assembly or installation questions. Your local reseller can also provide you with replacement parts for your new fixture.

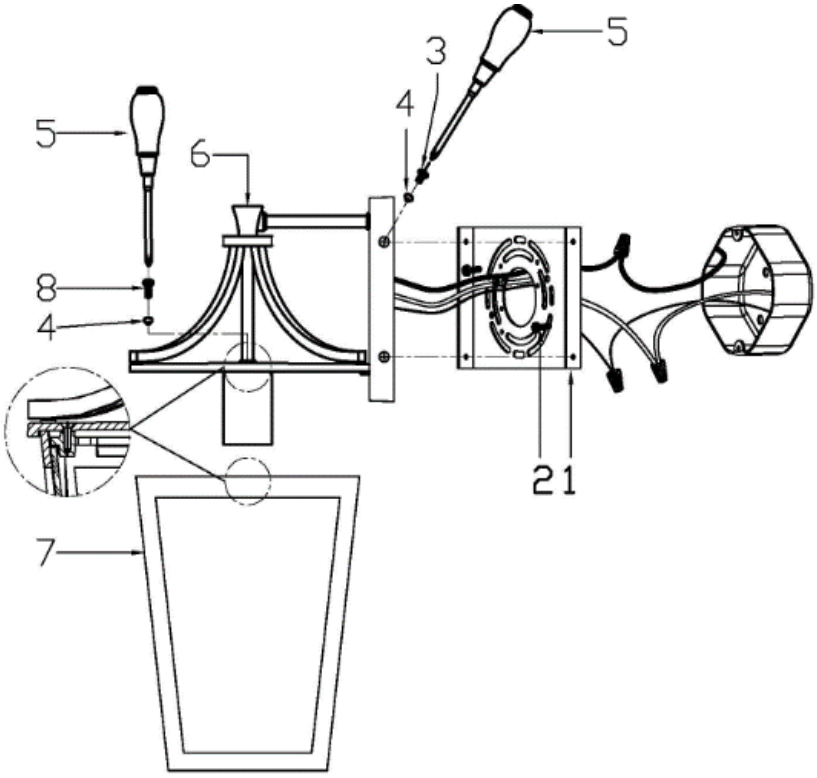

Components
1. Mounting Bracket w/Green Screw
2. Outlet Box Mounting Screws
3. Mounting Screw
4. Rubber Washer
5. Philips Screw Driver (not provided)
6. Fixture
7. Cage
8. Flat-head Screw

Assembly Instructions for the 947911 outdoor fixture

1. Disassemble the pre-installed Cage (7) from Fixture (6), then take out the protecting crushing materials.
2. Attach Mounting Bracket (1) to the Outlet Box with Outlet Box Mounting Screws (2), and make sure the mounting holes in both tabs are horizontal.
3. Raise Fixture (6) toward outlet box, then connect fixture ground wire to outlet box ground wire with wire connector supplied; connect white fixture wire to the white power supply wire with wire connector supplied; connect black fixture wire to the black power supply wire with wire connector supplied.
4. Push Canopy of Fixture (6) to the mounting surface, make sure mounting holes in Canopy of Fixture (6) and Mounting Bracket (1) are in line, and verify all wires are securely inside Canopy of Fixture (6) and Mounting Bracket (1), and carefully passing Mounting Screws (3) with Rubber Washers (4) through holes, then secure Canopy of Fixture (6) to the mounting surface with Mounting Screws (3) and Philips Screw Driver (not provided) (5).
5. Insert recommended bulb per wattage label indicated onto Socket.
6. Raise Cage (7) over Socket onto the top of Fixture (6), then secure it with Rubber Washers (4), Philips Screws (8), and Philips Screw Driver (not provided) (5).

Note: Guide for Outdoor Mounting Fixture and/or in Wet Locations:

1. Mounting surface should be clean, dry, flat, and 1/4" larger than the canopy on all sides. Any gaps between the mounting surface and canopy exceeding 3/16" should be corrected as required.

2. Use silicone caulking compound (not provided), and caulk completely around where the back of the canopy meets the wall surface to prevent water from seeping into the outlet box.